Thermal Dispersion & Paddle Type Flow Switch

FineTek

Innovation · Quality · Sharing

PRODUCT INTRODUCTION

OPERATING PRINCIPLE

Thermal dispersion flow switches measure the velocity of a liquid inside a pipe or channel.
The switch's probe contains two key components – a heating sensor and temperature sensor. The heating sensor is positioned closest to the flowing liquid and provides a consistent heat. The temperature sensor measures the temperature emitted from the heating sensor.

When liquid is flowing, there is a temperature difference between the two sensors. The temperature difference has an inverse relationship with the flow velocity (fast flowing liquids will result in greater heat differences and vice versa).
Since the device contains no moving parts, has no wear and tear and maintains a long lifespan.

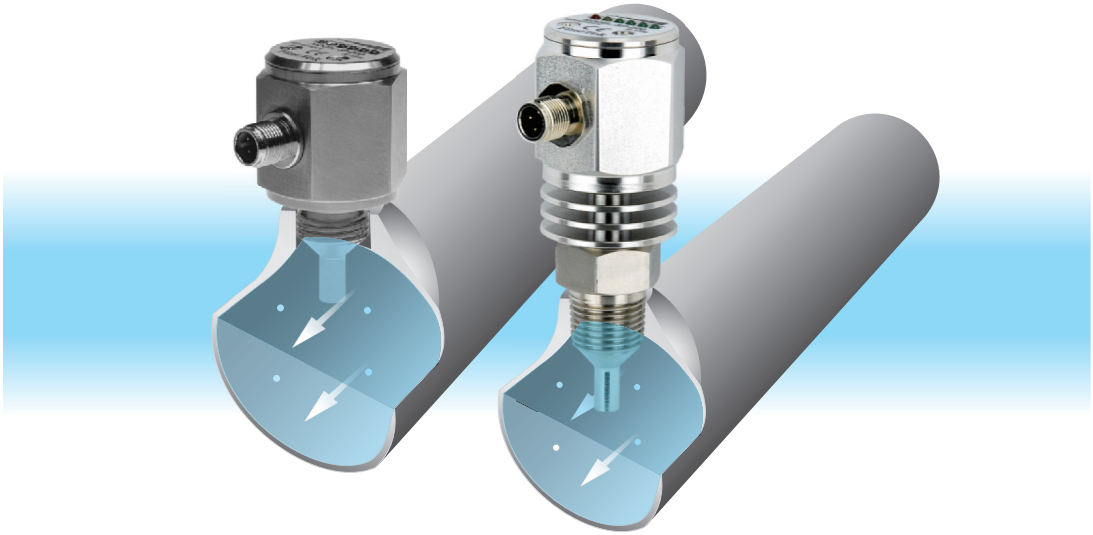

FEATURES

- High sensitivity and accuracy.
- Suitable for corrosive and hazardous conditions.
- Able to be calibrated for liquids with different densities and impurities.
- Suitable for complex locations with easy installation.
- Customized probe lengths available.
- Three different output signals options.

APPLICATION

Petrochemicals, Hydroelectric plants, Shipyard, HVAC Systems, Steel Industry Food and Beverage, Pharmaceutical,Optics and Semiconductor Industry, Cooling pipes flow control
Any pipes carrying liquid where flow measurement is needed.

PRODUCT SPECIFICATIONS

Drawings	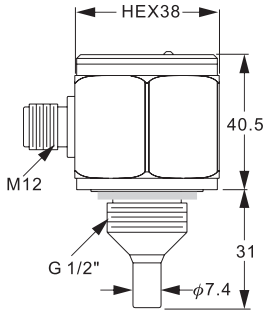	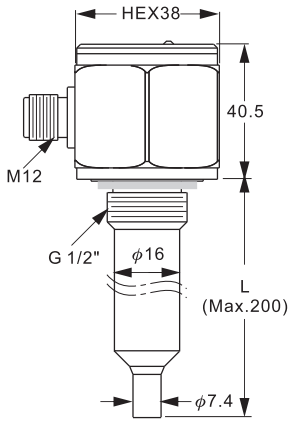	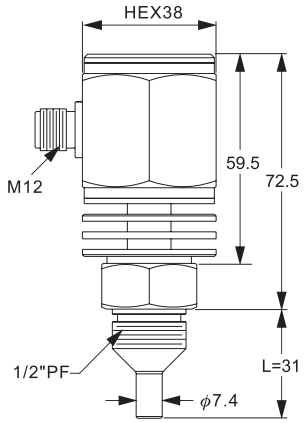
Model	**SP200 Compact model**	**SP201 Extension model**	**SP202 High temp. model**
Measuring range	Water: 1~150 cm/s Oil: 3~300 cm/s	Water: 1~150 cm/s Oil: 3~300 cm/s	Water: 1~150 cm/s Oil: 3~300 cm/s
Switching point	Flow velocity≤50cm/s @25°C,Water		
Ambient temp.	-20 ~ 80°C	-20 ~ 80°C	-20 ~ 80°C
Process temp.	-20 ~ 80°C	-20 ~ 80°C	-20 ~ 120°C
Alarm output	Open Collector : NPN / PNP(<400mA) Relay : 1A/30Vdc, 0.3A/125Vac (NO or NC)		
Operating pressure	100 bar (max.)	100 bar (max.)	100 bar (max.)
Led indication	Flow velocity below set point- Red LED on, Open Flow velocity equals set point- Yellow LED on, Close Flow velocity above set point- 4 Green LED to indicate flow speed, Close		
Housing	SUS304 / 316 / 316L		
Wetted part	SUS304 / 316 / 316L		
Protection level	IP67		
Warm-up time	Approx.15 Sec	Approx.15 Sec	Approx.15 Sec
Connection thread	G1/2, G1/4, NPT1/2	G1/2, NPT1/2	G1/2, G1/4, NPT1/2
Operating voltage	19 ~ 30Vdc		
Power consumption	50mA (max.)		
Electric connection	M12-4Pin Connector		
Accessory	Gasket		

Drawings	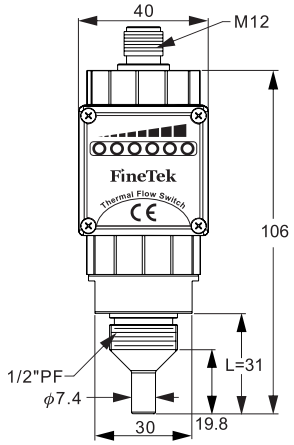
Model	**SP220 Economy model**
Measuring range	Water: 1~150 cm/s Oil: 3~300 cm/s
Switching point	Flow velocity≤50cm/s @25°C,Water
Ambient temp.	-20 ~ 80°C
Process temp.	-20 ~ 80°C
Alarm output	Open Collector : NPN / PNP(<400mA) Relay : 1A/30Vdc, 0.3A/125Vac (NO or NC)
Operating pressure	100 bar (max.)
Led indication	Flow velocity below set point- Red LED on, Open Flow velocity equals set point- Yellow LED on, Close Flow velocity above set point- 4 Green LED to indicate flow speed, Close
Housing	PC
Wetted part	SUS304 / 316 / 316L
Protection level	IP65
Warm-up time	Approx.15 Sec
Connection thread	G1/2, NPT1/2
Operating voltage	19 ~ 30Vdc
Power consumption	50mA (max.)
Electric connection	M12-4Pin Connector
Accessory	Gasket, 2m Cable
Footnote	Sensitivity and Alarm setting not available.

Drawings	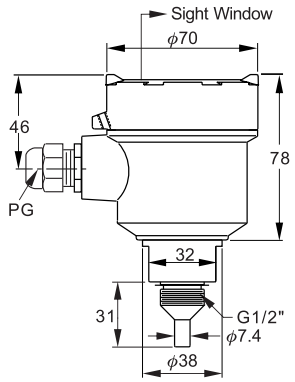	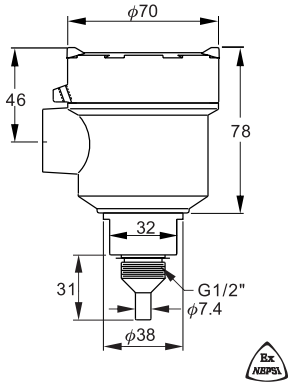	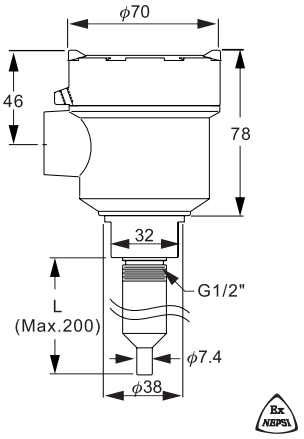
Model	**SP210** **Stainless steel model**	**SP170-(1/2)** **Explosion proof model**	**SP171-(1/2) Explosion-proof extension model**
Measuring range	Water: 1~150 cm/s Oil: 3~300 cm/s		
Switching point	Flow velocity≤50cm/s @25°C,Water		
Ambient temp.	-20 ~ 80°C	-20 ~ 60°C	
Process temp.	-20 ~ 80°C		
Alarm output	Relay: 5A/250Vac	Relay: 3A/250Vac	
Operating pressure	100 bar (max.)		
Led indication	Flow velocity below set point- Red LED on, Open Flow velocity equals set point- Yellow LED on, Close Flow velocity above set point- 4 Green LED to indicate flow speed, Close		
Housing	SUS304		
Wetted part	SUS304 / 316 / 316L		
Protection level	IP67		
Warm-up time	Approx.15 Sec		
Connection thread	G1/2, NPT1/2		
Operating voltage	19 ~ 30Vdc		
Power consumption	60mA (max.)		
Electric connection	5-wire Relay Output Power- red Grounding- black COM- white NC- yellow NO- blue		
Accessory	Gasket	———————	———————

OPTIONAL ACCESSORIES

M12 ELECTRICAL CABLE CONNECTOR

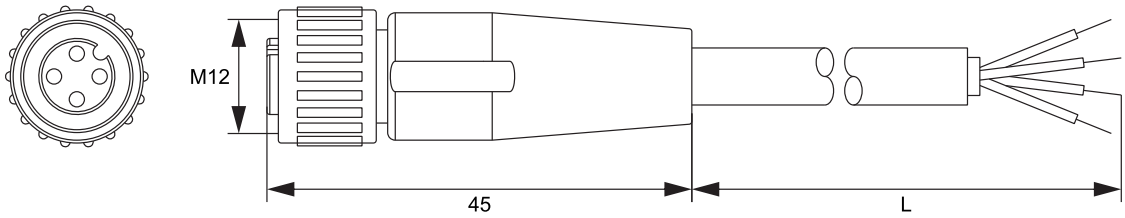

STANDARD SPECIFICATIONS

Order Code	Cable length	Voltage rating	Current rating	Working temp.	Protection grade
PC312-2101422M01	2m	Max. 250Vac	Max. 3A	-25~80θC	IP67
PC312-2101425M01	5m				
PC312-2101421001	10m				

INSTALLATION

INSTALLATION

1. Use the water-proof gasket provided
2. The distance "a" should be 4 times larger than the switches' screw diameter. (Fig. 1)
3. The pipe is bubble free for proper functioning. (Fig. 2)
4. For not-completely-filled pipes, install from the bottom. The liquid level needs to be higher than the probe height. (Fig. 3)
4. Screw tightly to avoid. Can be installed from various angles. For best sensitivity and response speed, please install using in the demonstrated in Fig. 4
5. Installing a filter upstream can decrease liquid impurities which can reduce wear and tear on the switch.

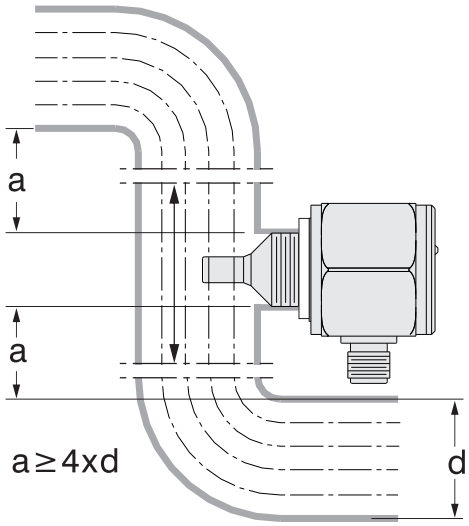

Fig. 1

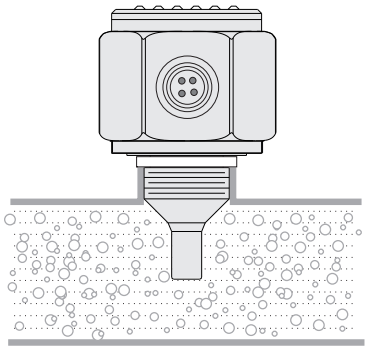

Fig. 2

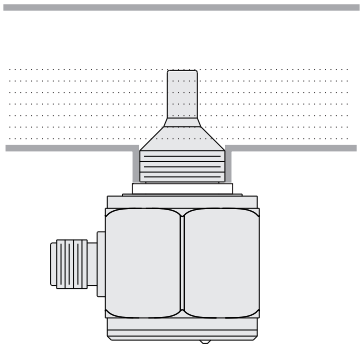

Fig. 3

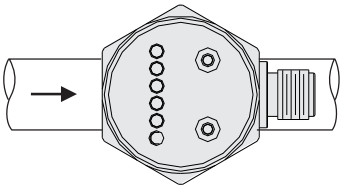

Fig. 4

WIRING AND CONNECTIONS

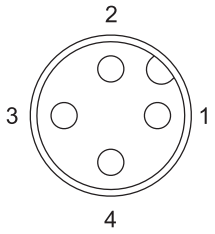

Fig. 5
Wire terminal diagram
(NPN, PNP and 1A relay output type)

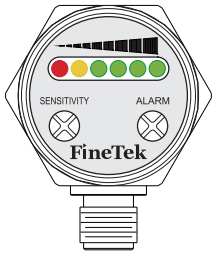

Fig. 6

WIRING

3-wire

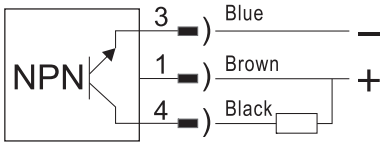

Fig. 7, NPN output type wiring

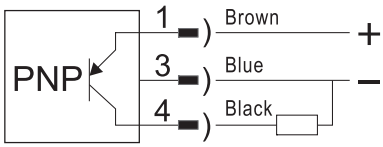

Fig. 8, PNP output type wiring

5-wire

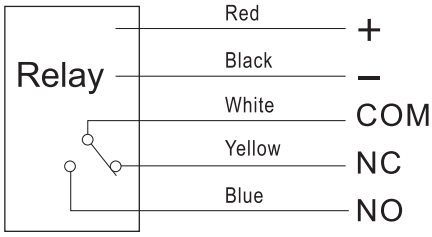

Fig. 9, Relay output type wiring

4-wire

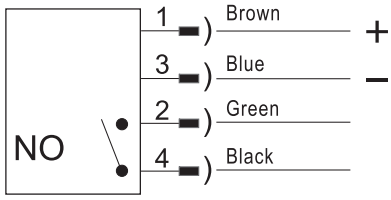

Fig. 10, Relay output type wiring (NO)

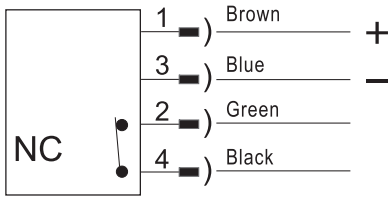

Fig. 11, Relay output type wiring (NC)

SCREW TABLE

Standard				
Screw	PF,BSP		PT,NPT	
	Screw head	L	Screw head	L
1/4”	8.5mm	25mm	10mm	25mm
1/2”	10.5mm	31mm	19mm	40mm
1”	16mm	36mm	20mm	40mm

Extension				
Screw	PF,BSP		PT,NPT	
	Screw head		Screw head	
1/2”	11.5mm	16mm	16mm	20mm
1”	16mm		20mm	

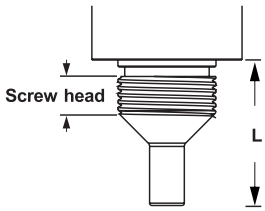

MODEL NUMBER / ORDER CODE COMPARISON TABLE

Model Number	Order Code
SP200	SPX10000-A
SP201	SPX10000-B
SP202	SPX10200-A
	SPX10200-B
SP220	SPX10100-A
SP210	SPX10000-C
SP170	SPX1007C-C
SP171	SPX1007C-D
26-0504-2M	PC312-2101422M01
26-0504-5M	PC312-2101425M01
26-0504-10M	PC312-2101421001

ORDER INFORMATION

⑤⑥ ⑦⑧ ⑨ ⑩⑪ ⑫⑬ ⑭⑮ ⑯⑰ ⑱ ⑲⑳ ㉑㉒

SPX1 □□□□-□□□□□□□□□□□□□□

⑤⑥ Model

00: Standard
01: Economy(ABS)
02: Hi-temperature

⑦⑧ Certification

00: None
7C: NEPSI-Exd
B0: DNV

⑨ Construction

A: Compact type
B: Extension type
C: Stainless steel type
D: Stainless steel extension type

Connection

⑩⑪	⑫⑬	⑭⑮
Thread item	A4: 3/8"	01: PT male
AA: JIS	A2: 1/4"	03: PF male
AB: ISO	A5: 1/2"	05: BSP male
AC: ANSI	A7: 3/4"	07: NPT male
	A8: 1"	13: GAS male

⑯⑰ Material

MA: SUS 304
MB: SUS 316
MC: SUS 316L

⑱ Output signal

A: NPN
B: PNP
C: Relay 1A/30Vdc, 0.3A/125Vac(NO)
D: Relay 1A/30Vdc, 0.3A/125Vac(NC)
E: SPDT 3A/5A, 250Vac(Only stainless steel type)

⑲⑳㉑㉒ Length

Code	Description
0031~0200	0031(PF), 0040(NPT/PT)mm, Max.0200
0070~0200	0070~0200mm

PADDLE TYPE FLOW SWITCH

PRINCIPLE

Flow switch can detect liquid movement in pipes. When the liquid is static or nonexistent, the spring is fully extended pulling the magnet downward and opening the switch.
As flow occurs and the paddle is thrusted forward 20°~30° (or more) the paddle will push the magnet upward and actuate the switch (closing the circuit) The length of paddle can be adjusted to the pipe's diameter.

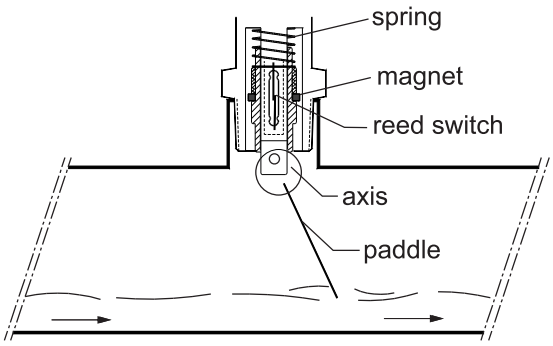

Switch on in case of liquid flowing in pipes

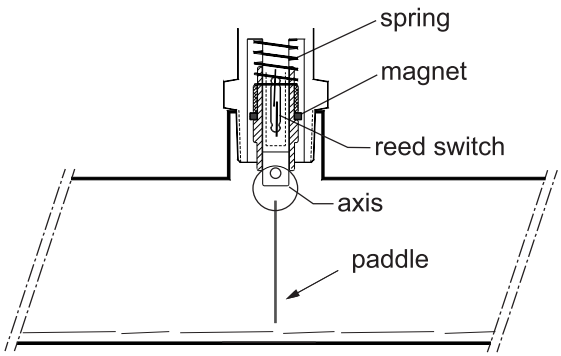

Switch off in case of no moving liquid in pipes

SECTIONAL DRAWINGS

1. O-Ring
2. Paddle
3. Axis
4. Reed switch
5. Spring
6. Magnet
7. Housing
8. Screw
9. Center rod

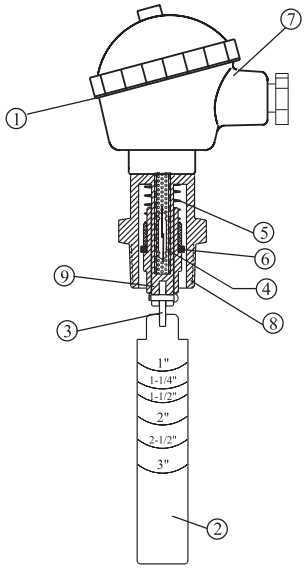

PRODUCT SPECIFICATIONS

NEPSI Ex d IIC T4~T6 Gb

Drawings	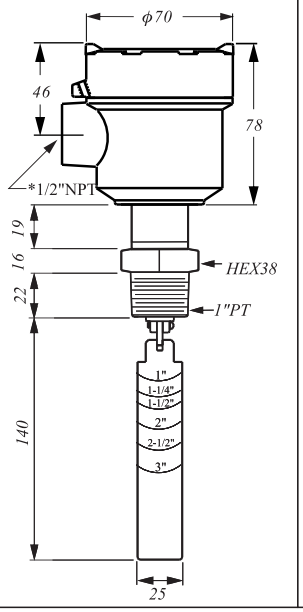	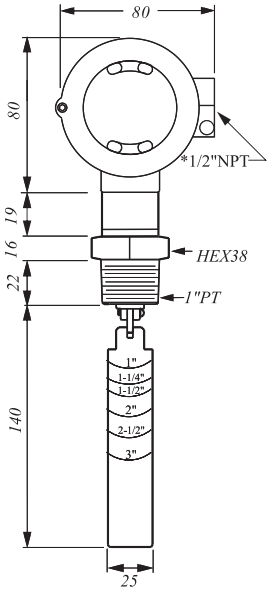	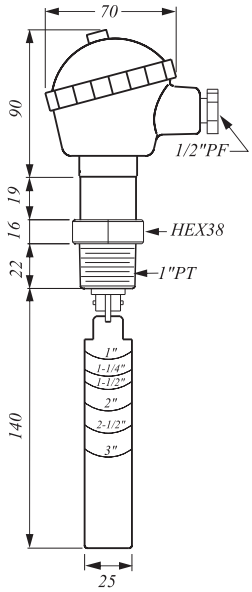
Model	SF1710		SF1800
	Explosion-Proof type	Enhance type	Standard type
Housing material	Stainless steel, IP65	Aluminum Alloy, Ex d	Aluminum Alloy, IP65
Process temp.	-30 ~ 130°C	-30 ~ 150°C	-30 ~ 150°C
Wetted material	SUS304		
Operation pressure	Max.355 PSIG		
Pressure drop allowance	3 PSIG		
Set point tolerance	±25%		
Repeatability tolerance	±5%		
Contact capacity	1A,40W 230Vac / 30Vdc SPDT	1A,60W 220Vac / 200Vdc SPDT	
Certification	NEPSI Ex d IIC T4~T6 Gb	N/A	

* Optional part 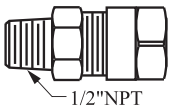

FLOW CONTROL RANGE TABLE

Flow Volume (Gallon/Min.) / Paddle Length	1"		1-1/2"		2"		2-1/2"		3"	
	Act.	De-Act.	Act.	De-Act.	Act.	De-Act.	Act.	De-Act.	Act.	De-Act.
1"	4.7	3.9	10.9	8.3	19.9	16.1				
1-1/4"			7.7	6.1	16.5	12.3	31.3	22.8		
1-1/2"			5.7	4.5	13.4	9.5	25.2	18.5		
2"					8.4	6.3	15.1	12.8	29.7	21.9
2-1/2"							13.9	10	20.4	15.4
3"									17.1	12.8

※1 Gallon=3.7854 Litter

INSTALLATION

1. The paddle length is dependent on the lowest paddle point to actuate the switch. Cut the paddle at appropriate pipe size mark or wherever desired. The minimum is 1".
2. The paddle must be at a right angle to the direction of flow
3. The FLOW mark on the screw must be parallel to the pipe.
4. Before installing the unit to a tee pipe, apply thread seal tape to the screw and then tighten.

● Not recommended for 1" or smaller NPT plastic pipes.

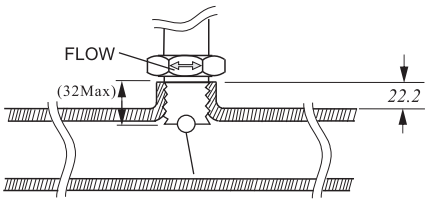

CAUTION

1. The pressure and temperature ranges as shown in the catalog, must not be exceeded and also take the abrupt pressure and temperature into considerations.
2. Large sudden changes in liquid temperature and density (specific gravity) changes will influence the flow switch accuracy
3. Although highly rigid and durable, shock and vibration should be minimized.
4. Excessive fluid debris might inhibit paddle operation. Occasionally remove switch and clean off any debris.
5. Sealing electrical connections and the connection will reduce moisture damage.

MODEL NUMBER / ORDER CODE COMPARISON TABLE / ORDER INFORMATION

Model Number	Order Code
SF1800	SFX10000-A1EAAA801
SF1710	SFX10000-A1LAAA801
	SFX1007C-A1NAAA801

SFX1 0 0 ⑦⑧□□-A1 ⑪□ ⑫⑬□□ ⑭⑮□□ ⑯⑰□□ ⑱⑲□□ ⑳□

⑦⑧ Certification

00：None
7C：NEPSI-Ex d

⑪ Housing

Code	Description
E	Aluminum, IP 65, Only code for "00" on certification column.
L	Aluminum, Ex d, Only code for "00" on certification column.
N	Stainless steel, 1/2"NPT, Only code for "7C" on certification column.

Connection

⑫⑬
Thread
AA：JIS
AC：ANSI

⑭⑮
A8：1"

⑯⑰
01：PT male
07：NPT male

⑱⑲ Material

MA：SUS 304
MB：SUS 316

⑳ Paddle length

X：Standard