Bracket mounted bilge switch with lifting bracket BR-LCG-1036-A1

Bracket mounted bilge float switches can measure the location and amount of liquid that is present in the bilge. The switch is built with a tough slosh shield, and stainless-steel mounting bracket. The float switch rests on the side of the container, or wall and can measure the location of the sensor. When the sensor gets to a specific level, in conjunction with relays it can be connected to control the pump to drain the liquid or direct it to another compartment or to a high-level alarm to alert when the bilge is reaching capacity.

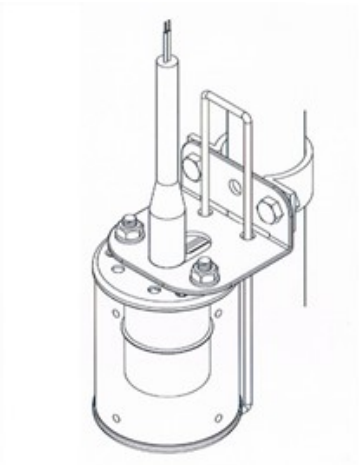

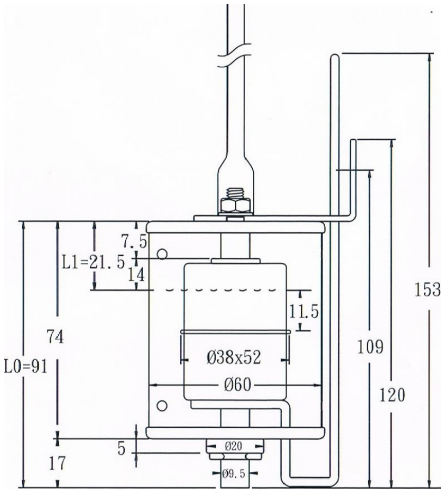

Applications

- Hydraulic and diesel oil
- Plant Construction
- Fresh Water Tanks and Marine application
- Storage tanks
- Bilge Wells and Sumps

BR-LCG-1036-A1

Technical data:	**BR-LCG-1036-A1**
Mounting style	Bracketed mounting
Lifting bracket	Yes
Slosh shield material	Acrylic Ø 60 x 4 t
Float & stem material	SUS316 & SUS 304
Maximum Temperature	-20°C to +80°C
Maximum Pressure	20 bar
Float S.G	0.7
Minimum fluid S.G	0.8
Contact form	Form A, SPST
Switching power max. VA	50W (70VA)
Switching voltage max.	240 VAC /200 VDC
Switching current	0.5 A
Electrical connection	FEP jacket cable 1M
IP protection	IP 68
Weight	Approx. 320 g

Unit 6A, 9-11 Laidlaw way, East Tamaki, Auckland 2019, New Zealand
+64 (09) 2620106 / 2620206, Toll free call: 0800 323 327 info@ecefast.co.nz www.ecefast.co.nz